Lab 06 – Worksheet

Name: Maleeha Prabha	ID: 09991 10292	Section: T1

Note: Assumptions and logics should be explained separately in tasks after the task results.

Task 1

Block Diagrams

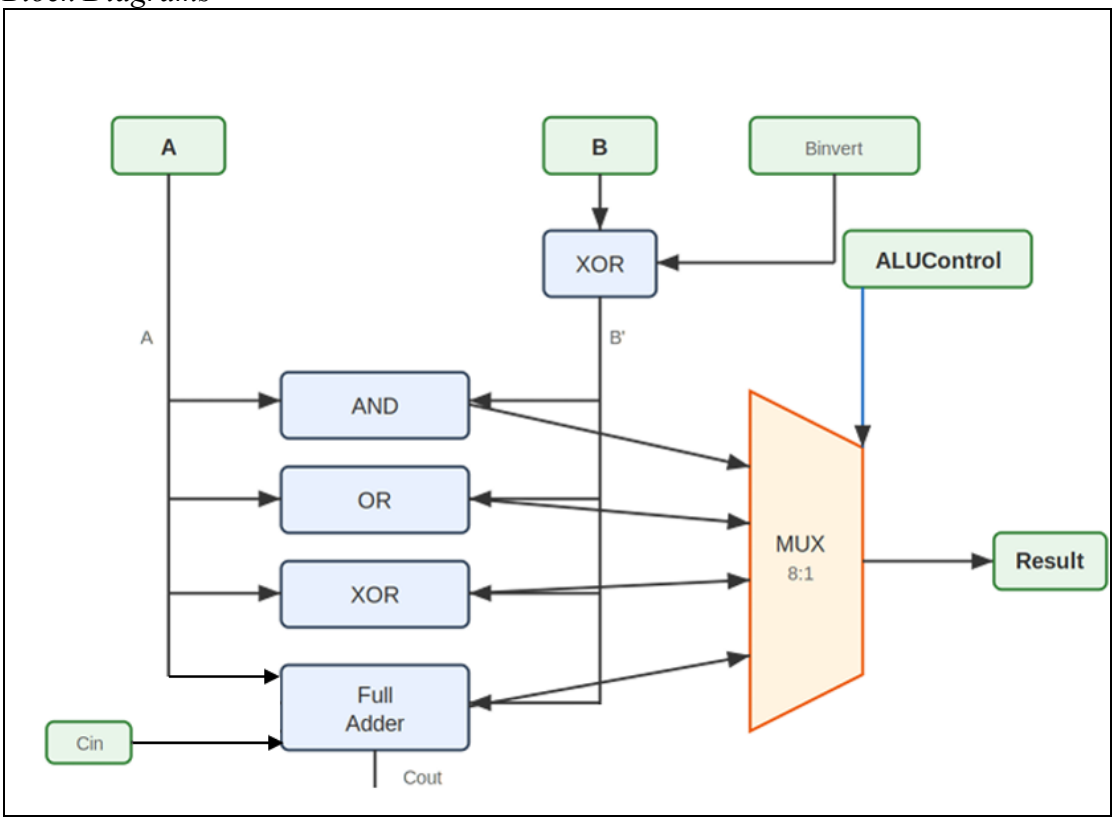

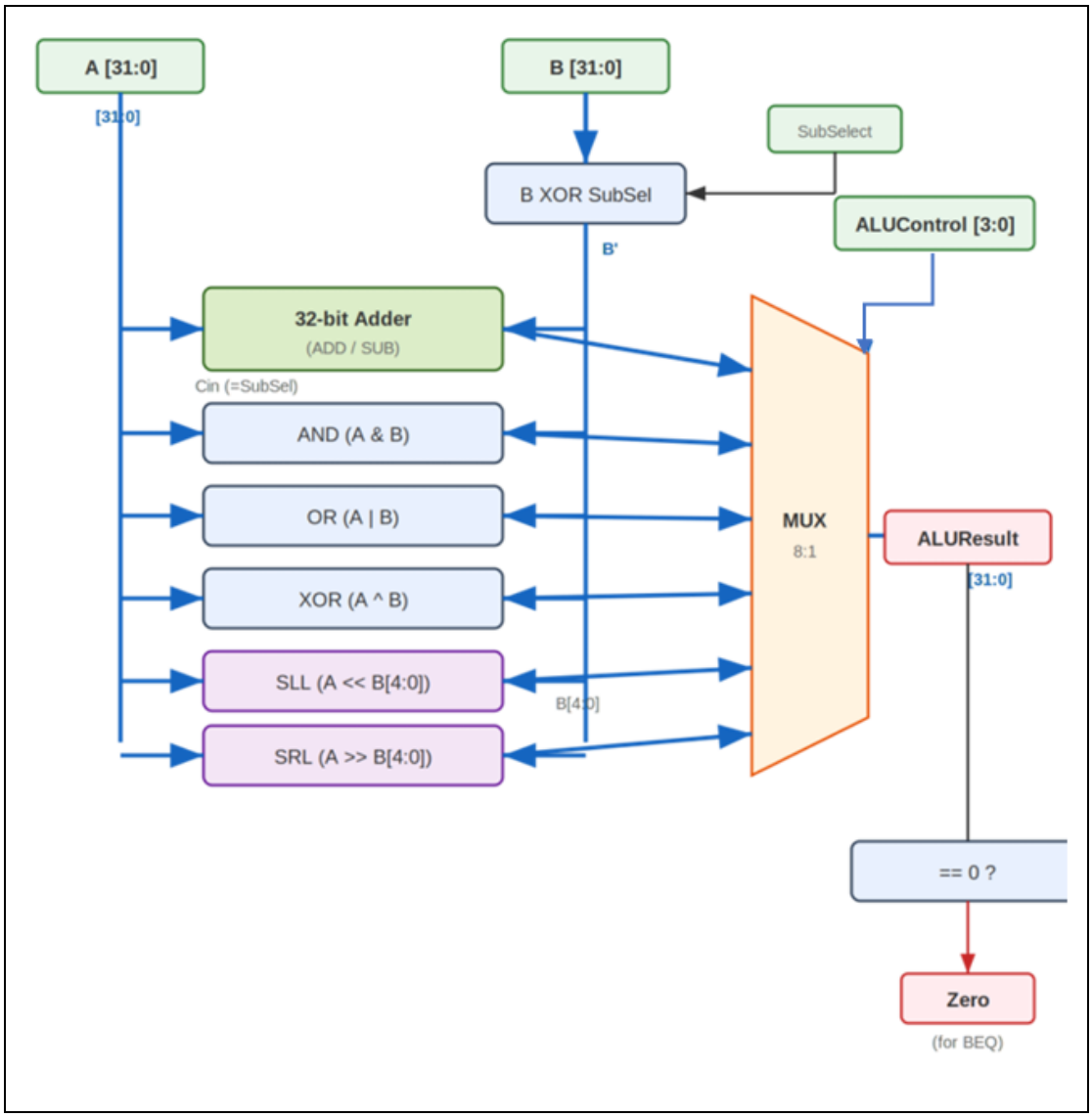
A [31:0]
[31:0]
B [31:0]
SubSelect
B XOR SubSel
ALUControl [3:0]
B'
32-bit Adder
(ADD / SUB)
Cin (=SubSel)
AND (A & B)
OR (A | B)
XOR (A ^ B)
SLL (A << B[4:0])
SRL (A >> B[4:0])
B[4:0]
MUX
8:1
ALUResult
[31:0]
== 0 ?
Zero
(for BEQ)

Comments

Task 2

Modules + Testbench:

```
Toplevelmodule:
`timescale 1ns / 1ps
//////////////////////////////////////////////////////////////////////////////////
// Company:
// Engineer:
//
// Create Date: 02/26/2026 10:56:10 AM
// Design Name:
// Module Name: toplevelmodule
// Project Name:
// Target Devices:
// Tool Versions:
// Description:
//
// Dependencies:
//
// Revision:
// Revision 0.01 - File Created
// Additional Comments:
//
//////////////////////////////////////////////////////////////////////////////////


module toplevelmodule(
    input clk,
    input reset,
    input [15:0] switches_in,
    output [15:0] leds_out
    );

    wire [31:0] op_A=32'h10101010;
    wire [31:0] op_B=32'h01010101;


    wire [31:0] switchess;
    switches s1(.clk(clk), .rst(reset), .btns(16'b0), .switches(switches_in),
.readEnable(1'b1), .writeData(32'b0), .writeEnable(1'b0), .readData(switchess) );
    //alucontrol fot lower 4 switches
    wire [3:0] control;
    assign control = switchess[3:0];
```

```
   wire op_clean;
   debouncer u1(.clk(clk), .pbin(switches_in[4]), .pbout(op_clean) );

   wire [31:0] result;
   wire zero_flag;
   ALU_module  u2(.A(op_A),  .B(op_B),  .ALUControl(control),  .ALUResult(result),
.zero(zero_flag) );

   wire [31:0] ledss;
   leds l1(.clk(clk), .rst(reset), .btns(16'b0),
.writeData(result),.writeEnable(1'b1),.readEnable(1'b0), .memAddress(30'b0),
.switches(16'b0), .readData(ledss) );
//   wire display=switchess[4];
//   wire [15:0] display_data = (display) ? ledss[31:16] : ledss[15:0];

   assign leds_out = (op_clean)? ledss[31:16] : ledss[15:0];
endmodule


switches:
`timescale 1ns / 1ps
module switches(
   input clk,
   input rst,
   input [15:0] btns,
   input [15:0] switches,
   input readEnable,
   input [31:0] writeData,
   input writeEnable,
   output reg [31:0] readData
);

   always @(posedge clk) begin
      if (rst)
         readData <= 32'b0;
      else
         readData <= {16'b0, switches};
   end

endmodule

leds:
`timescale 1ns / 1ps

module leds(
   input clk,
   input rst,
   input [15:0] btns,
```

```
    input [31:0] writeData,
    input writeEnable,
    input readEnable,
    input [29:0] memAddress,
    input [15:0] switches,
    output reg [31:0] readData
);

    always @(posedge clk or posedge rst) begin
        if (rst)
            readData <= 32'b0;
        else if (writeEnable)
            readData <= writeData;
    end

endmodule

debouncer:
`timescale 1ns / 1ps
//////////////////////////////////////////////////////////////////////////////////
// Company:
// Engineer:
//
// Create Date: 02/19/2026 10:21:59 AM
// Design Name:
// Module Name: debouncer
// Project Name:
// Target Devices:
// Tool Versions:
// Description:
//
// Dependencies:
//
// Revision:
// Revision 0.01 - File Created
// Additional Comments:
//
//////////////////////////////////////////////////////////////////////////////////


module debouncer(
    input clk,
    input pbin,
    output reg pbout
    );
    reg [19:0] counter=0;
    reg sync_0=0;
    reg sync_1 = 0;
```

```
   always @(posedge clk) begin
      sync_0 <= pbin;
      sync_1 <= sync_0;
   end

   always @(posedge clk) begin
      if(pbout==sync_1)
         counter <= 0;
      else begin
         counter <= counter + 1;
         if (counter == 20'hFFFFF) begin
            pbout   <= sync_1;
            counter <= 0;
         end
      end
   end


endmodule

ALU_moduke:
`timescale 1ns / 1ps
//////////////////////////////////////////////////////////////////////////////////
// Company:
// Engineer:
//
// Create Date: 02/26/2026 09:43:45 AM
// Design Name:
// Module Name: ALU_module
// Project Name:
// Target Devices:
// Tool Versions:
// Description:
//
// Dependencies:
//
// Revision:
// Revision 0.01 - File Created
// Additional Comments:
//
//////////////////////////////////////////////////////////////////////////////////


module ALU_module(
   input [31:0]A, input [31:0]B,
   input [3:0] ALUControl,
   output reg [31:0]ALUResult,
```

```
    output zero
    );

    always @(*) begin
        if (ALUControl == 4'b0000) ALUResult <= A+B;
        else if (ALUControl == 4'b0001) ALUResult <= A-B;
        else if (ALUControl == 4'b0010) ALUResult <= A&B;
        else if (ALUControl == 4'b0011) ALUResult <= A|B;
        else if (ALUControl == 4'b0100) ALUResult <= A^B;
        else if (ALUControl == 4'b0101) ALUResult <= A<<B[4:0];
        else if (ALUControl == 4'b0110) ALUResult <= A>>B[4:0];
        else ALUResult <= 32'b0;

    end

    assign zero = (ALUResult==0);

endmodule

testbench:
`timescale 1ns / 1ps
//////////////////////////////////////////////////////////////////////////////////
// Company:
// Engineer:
//
// Create Date: 02/26/2026 10:02:03 AM
// Design Name:
// Module Name: testbench_task2
// Project Name:
// Target Devices:
// Tool Versions:
// Description:
//
// Dependencies:
//
// Revision:
// Revision 0.01 - File Created
// Additional Comments:
//
//////////////////////////////////////////////////////////////////////////////////


module testbench_task2();
    reg [31:0] A;
    reg [31:0]B;
    reg [3:0] ALUControl;
    wire[31:0] ALUResult;
    wire zero;
```

```
   ALU_module alu(A,B, ALUControl, ALUResult, zero);

   initial begin
      A = 32'd5;
      B = 32'd3;
      ALUControl = 4'b0000;
      #10;

      A = 32'd10;
      B = 32'd3;
      ALUControl = 4'b0001;
      #10;

      A = 32'd2;
      B = 32'd3;
      ALUControl = 4'b0010;
      #10;

      A = 32'd2;
      B = 32'd3;
      ALUControl = 4'b0011;
      #10;

      A = 32'hAAAAAAAA;
      B = 32'h55555555;
      ALUControl = 4'b0100;
      #10;

      A = 32'd1;
      B = 32'd4;  // Shift by 4
      ALUControl = 4'b0101;
      #10;

      A = 32'h00001000;
      B = 32'd4;  // Shift by 4
      ALUControl = 4'b0110;
      #10;

      A = 32'd5;
      B = 32'd5;
      ALUControl = 4'b0001;  // SUB
      #10;
   $finish;
   end
endmodule
```

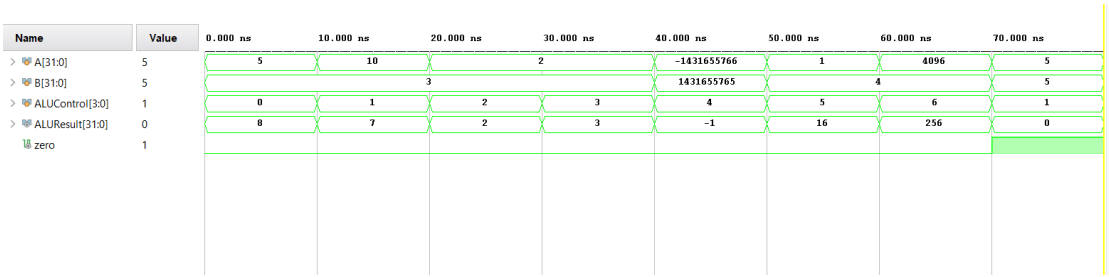

Results:

#	Op	A	B	Control	Result	Zero	Expected
1	ADD	5	3	0000	8	0	8, Zero=0
2	SUB	10	3	0010	7	0	7, Zero=0
3	AND	0xF0F0F0F0	0x0FF00FF0	0011	0x0FF000F0	0	0x0FF000F0, Zero=0
4	OR	0x0F0F0F0F	0xF0F0F0F0	0100	0xFFFFFFFF	0	0xFFFFFFFF, Zero=0
5	XOR	0xAAAAAAAA	0x55555555	0101	0xFFFFFFFF	0	0xFFFFFFFF, Zero=0
6	SLL	1	4	0110	16	0	16, Zero=0
7	SRL	0x1000	4	0111	0x100	0	0x100, Zero=0
8	Zero	5	5	0010	0	1	0, Zero=1

Task 3

RTL Schematics

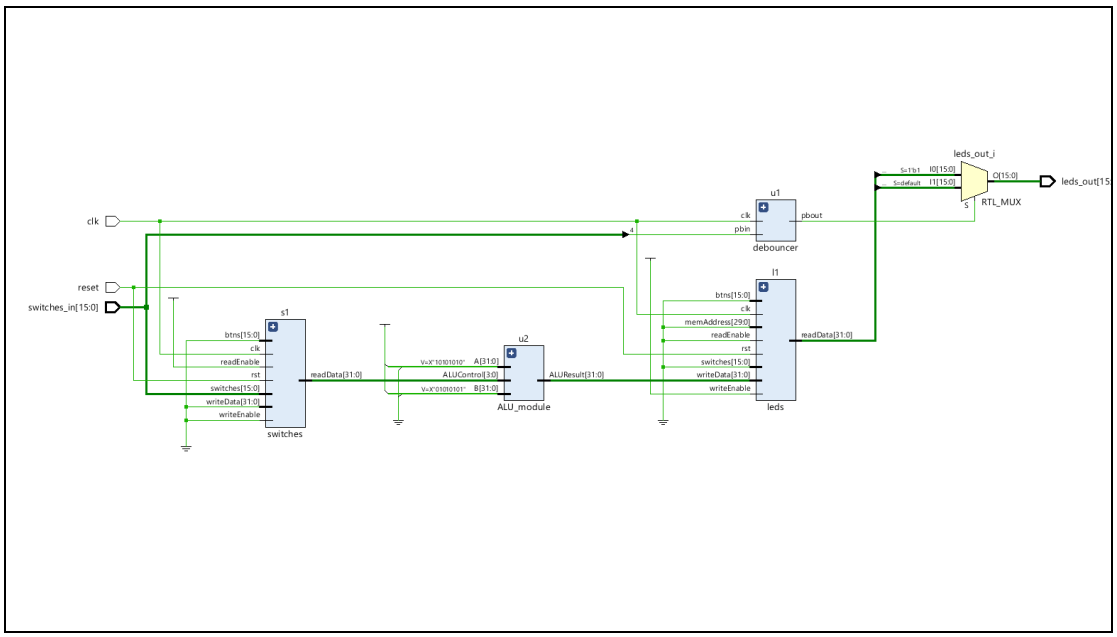

Lab 05 – Designing FSM Using FPGA Switches and LEDs
Assessment Rubrics

Points Distribution

Task No.	LR2 Code	LR 5 Results	LR11 Design	AR7
Task 1	-	-	/20	/20
Task 2	/20	/15		
Task 3	/10	/15		
Total Points	/80			/20
CLO Mapped	CLO 1			

For description of different levels of the mapped rubrics, please refer the provided Lab Evaluation Assessment Rubrics and Affective Domain Assessment Rubrics.

#	Assessment Elements	Level 1: Unsatisfactory Points 0-1	Level 2: Developing Points 2	Level 3:Good Points 3	Level 4:Exemplary Points 4
LR2	**Program/Code / Simulation Model/ Network Model**	Program/code/simulation model/network model does not implement the required functionality and has several errors. The student is not able to utilize even the basic tools of the software.	Program/code/simulation model/network model has some errors and does not produce completely accurate results. Student has limited command on the basic tools of the software.	Program/code/simulation model/network model gives correct output but not efficiently implemented or implemented by computationally complex routine.	Program/code/simulation /network model is efficiently implemented and gives correct output. Student has full command on the basic tools of the software.
LR5	**Results & Plots**	Figures/ graphs / tables are not developed or are poorly constructed with erroneous results. Titles, captions, units are not mentioned. Data is presented in an obscure manner.	Figures, graphs and tables are drawn but contain errors. Titles, captions, units are not accurate. Data presentation is not too clear.	All figures, graphs, tables are correctly drawn but contain minor errors or some of the details are missing.	Figures / graphs / tables are correctly drawn and appropriate titles/captions and proper units are mentioned. Data presentation is systematic.
AR9	**Report**	All the in-lab tasks are not included in report and / or the report is submitted too late.	Most of the tasks are included in report but are not well explained. All the necessary figures / plots are not included. Report is submitted after due date.	Good summary of most the in-lab tasks is included in report. The work is supported by figures and plots with explanations. The report is submitted timely.	Detailed summary of the in-lab tasks is provided. All tasks are included and explained well. Data is presented clearly including all the necessary figures, plots and tables.